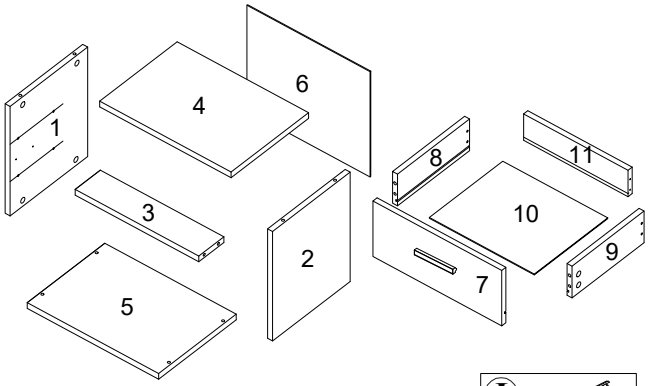

HARDWARE:

A	B	C screw 14 mm	D screw 35 mm
E Handle screw	F Handle	G Nail 21mm	H

I Drawer slide

1

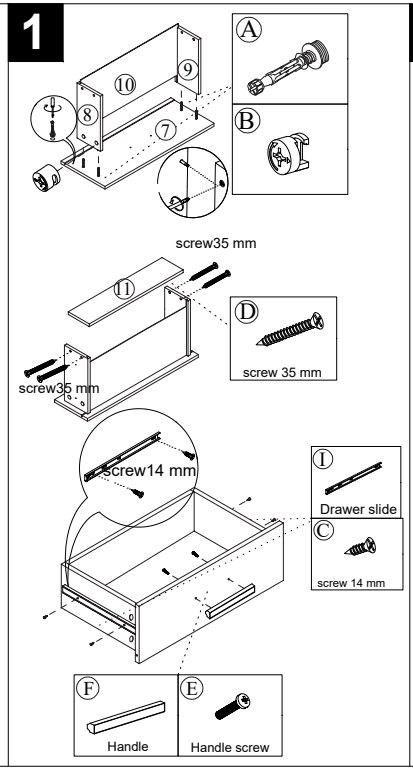

2

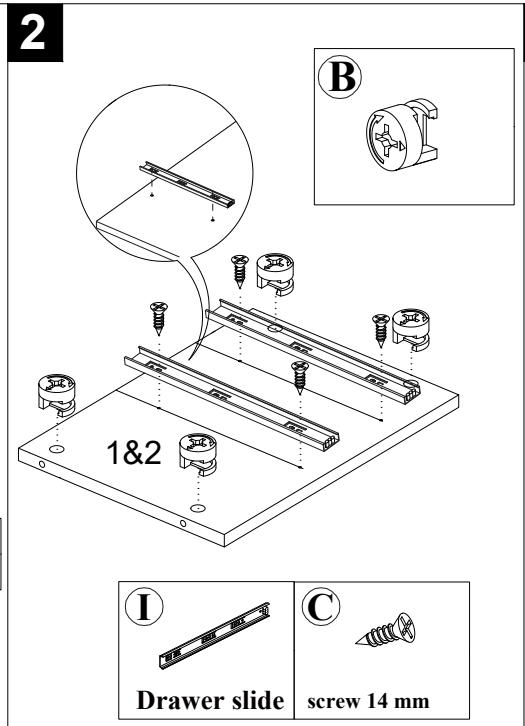

3

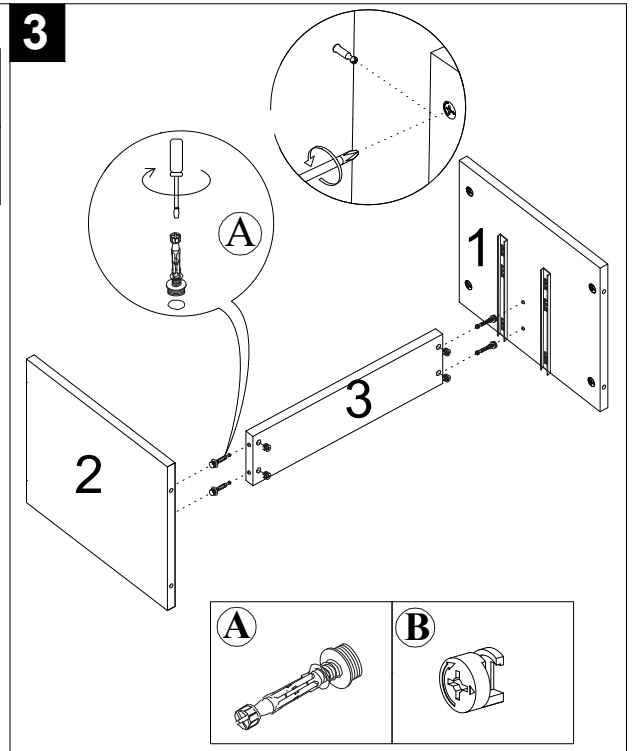

4

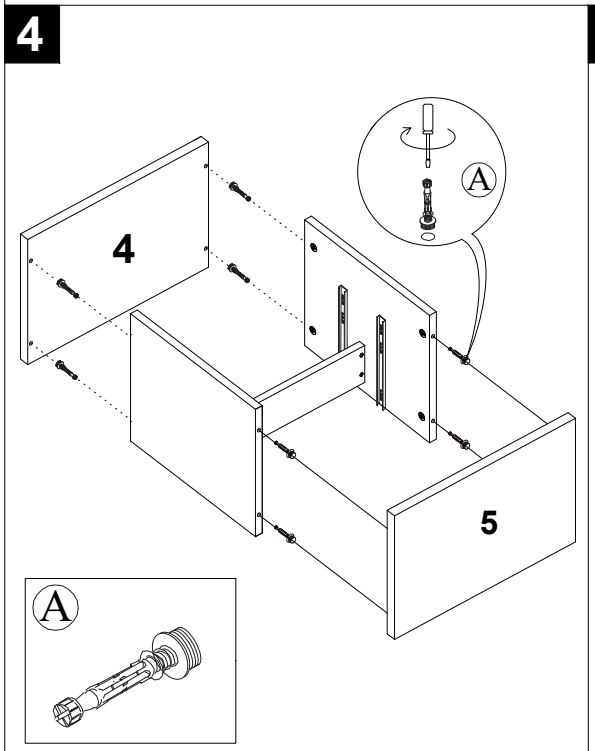

5

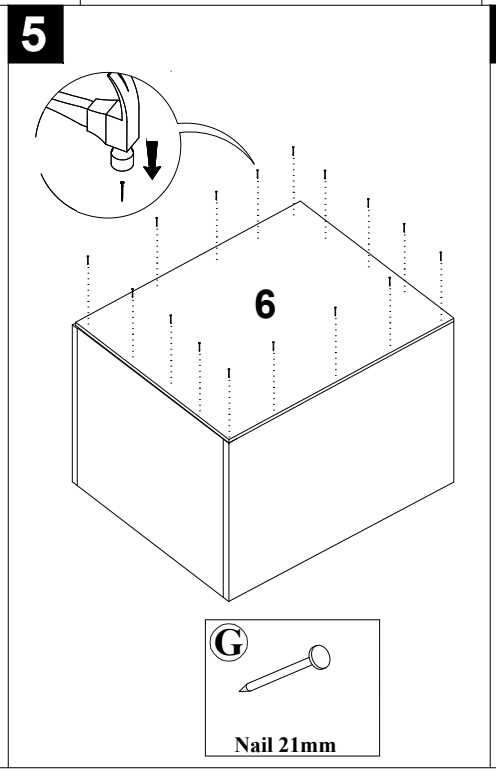

6

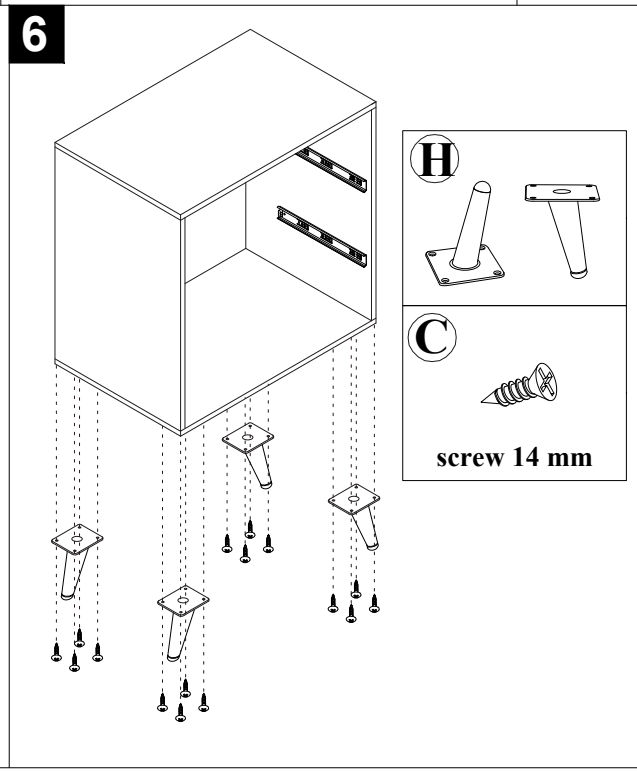

7

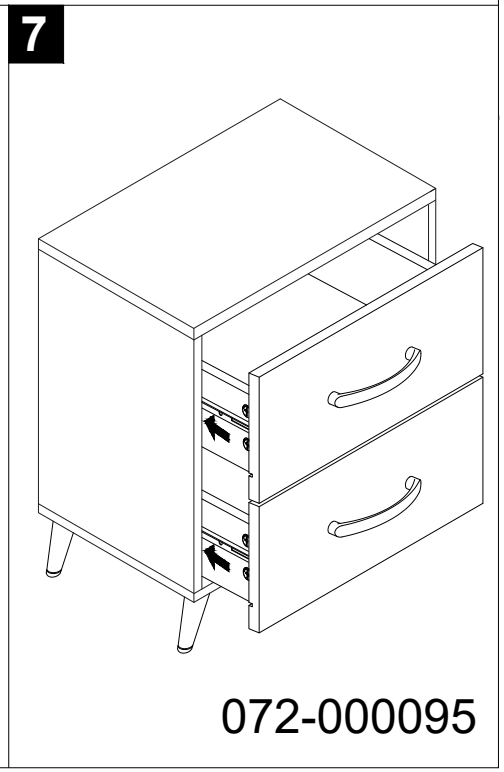

072-000095