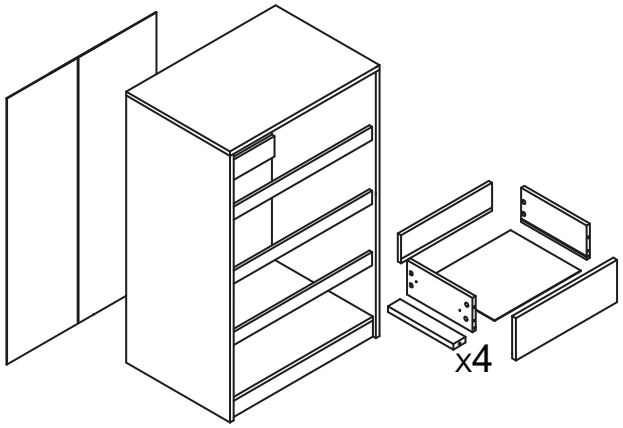

HARDWARE:

screw 3.5*14 mm	screw50 mm	Mini & fix	H Shape Plastic Strip
Drawer slide	screw 35 mm	Nail 21mm	

1

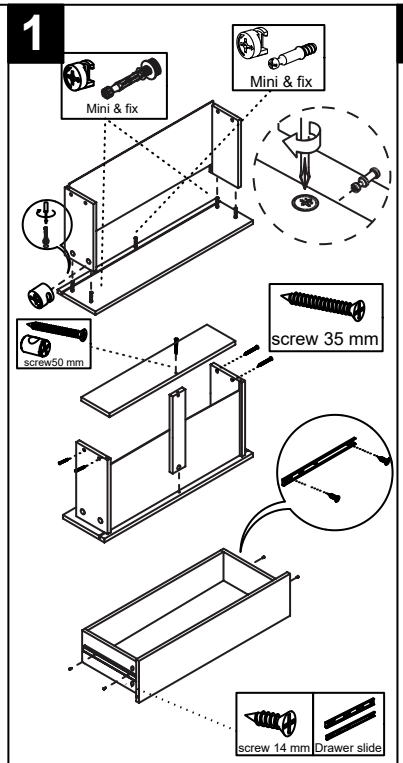

2

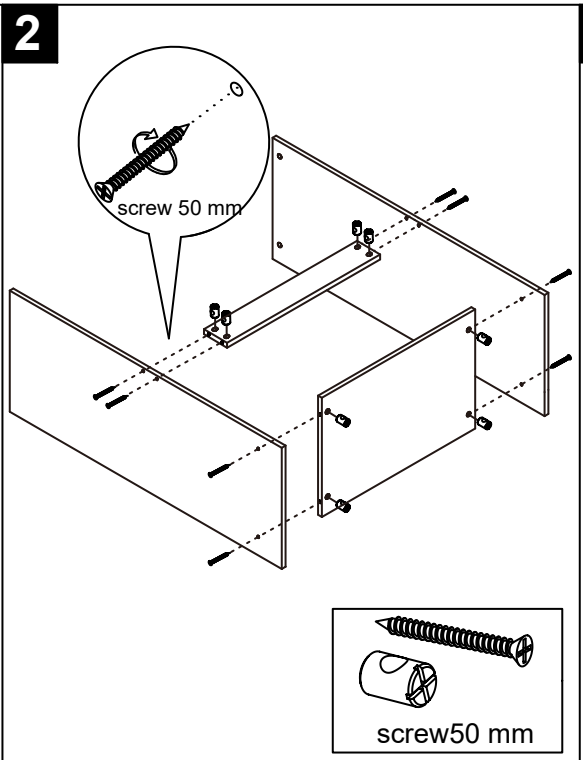

3

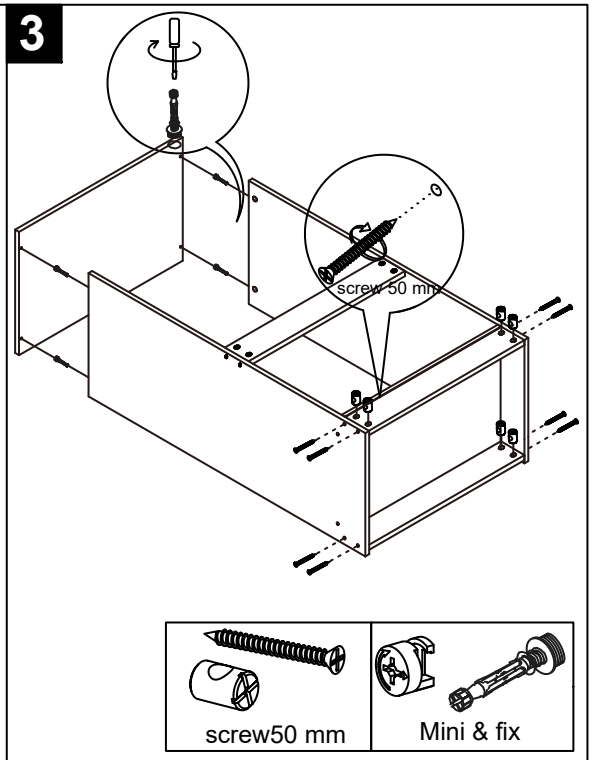

4

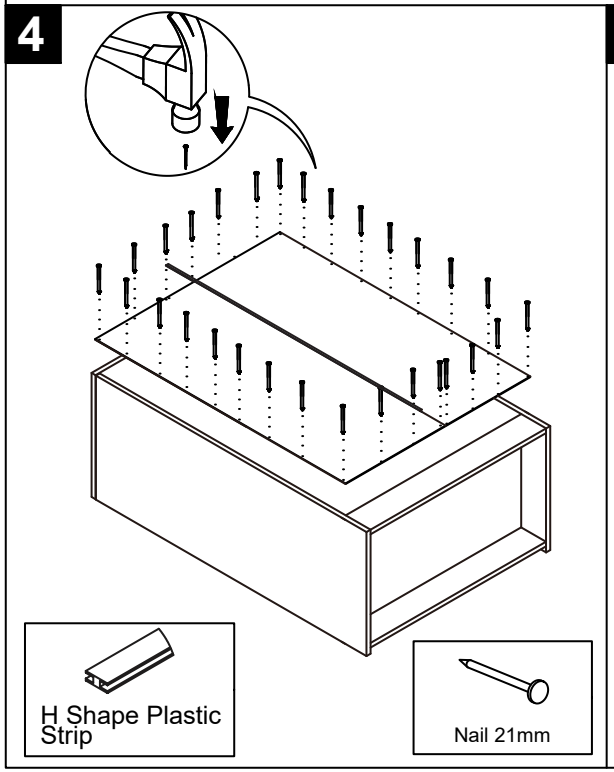

5

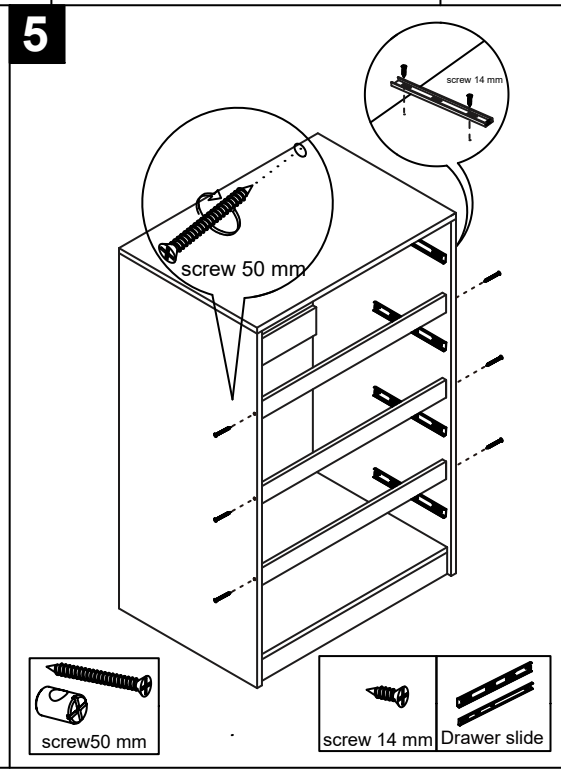

6

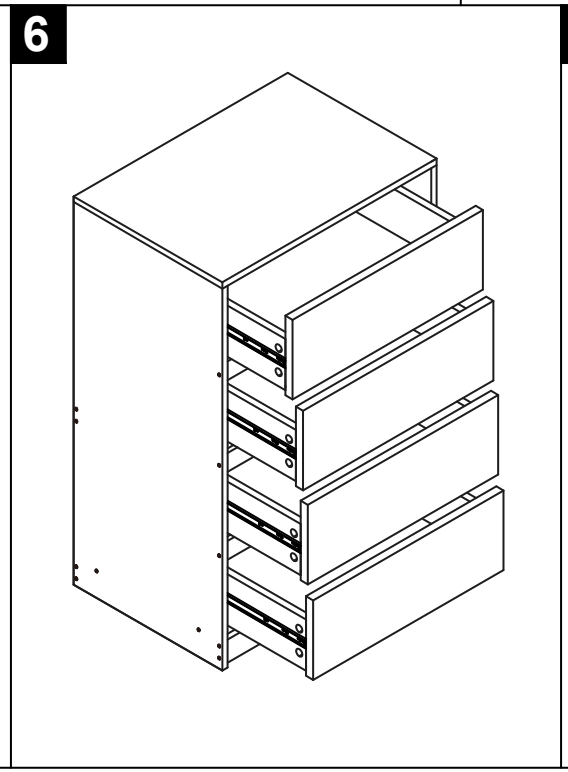

7

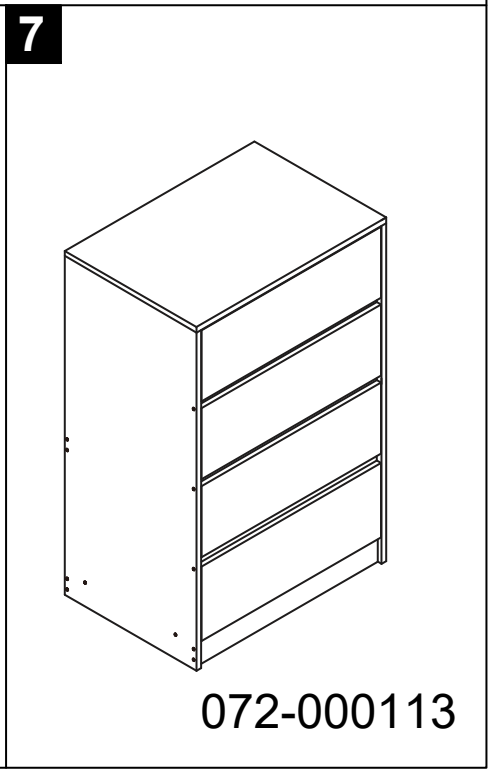

072-000113