ASSEMBLY INSTRUCTION

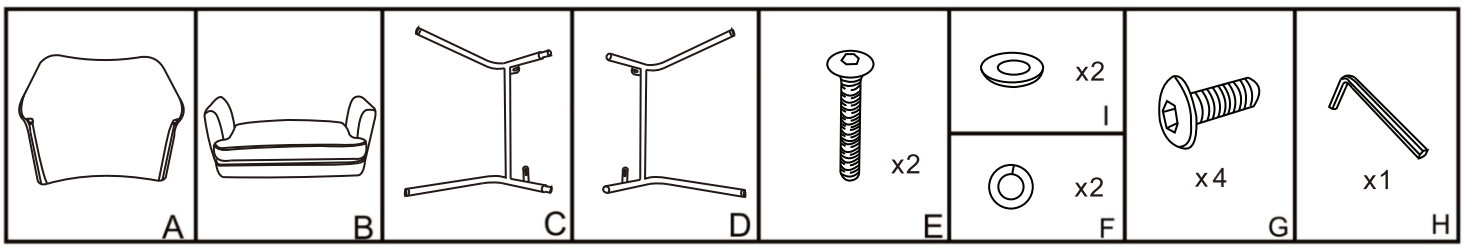

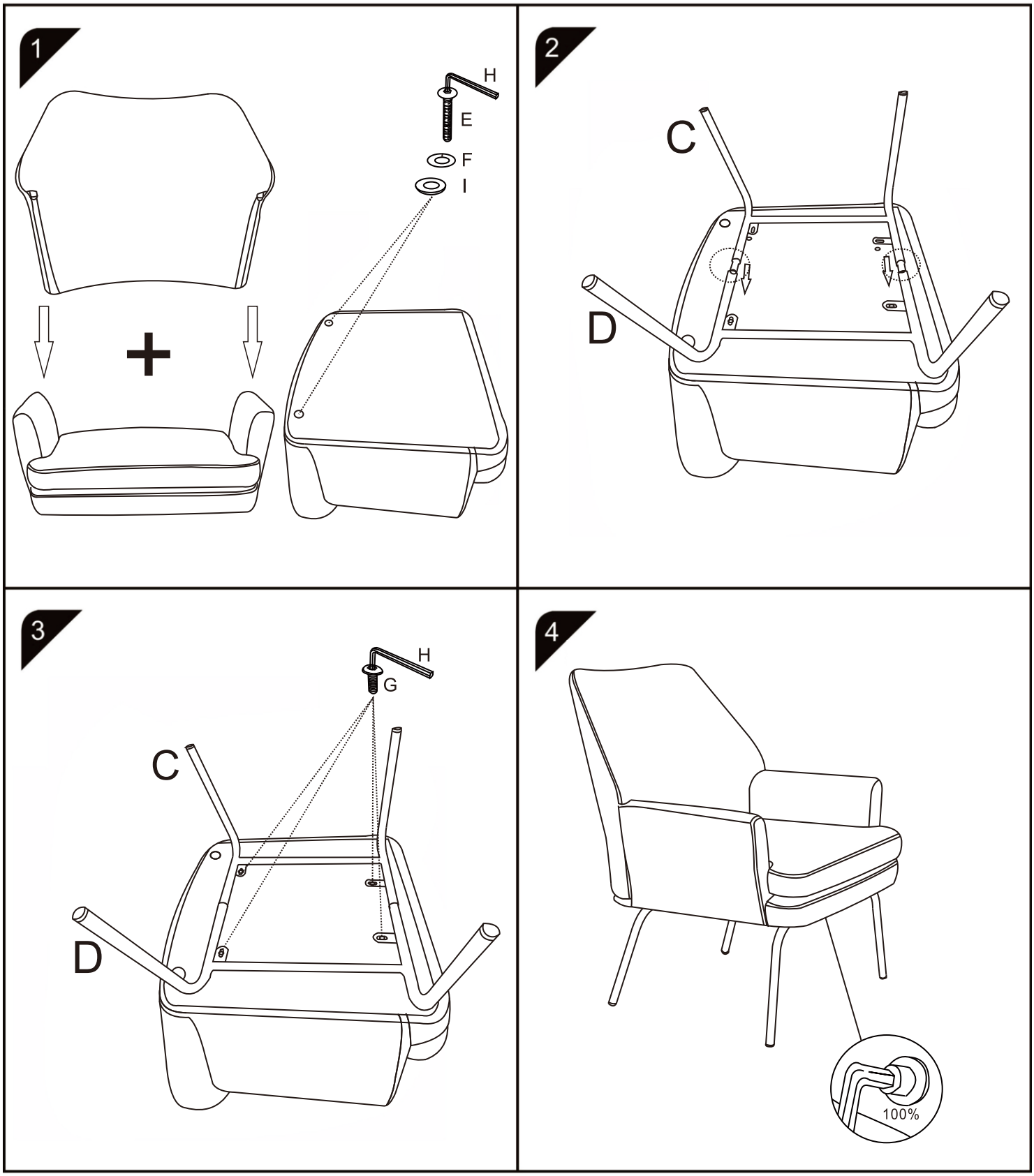

255-000044